Spina per connettore termocoppia a filo rapido in miniatura AM-E-MQ Tipo E ANSI



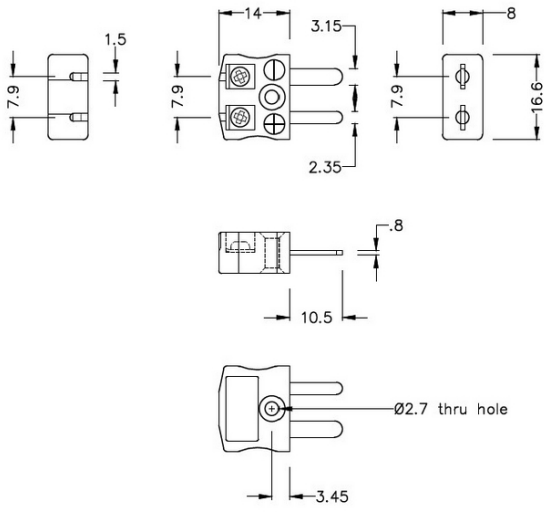

Miniature in-line Plug - Quick Wire
(dimensions in mm)

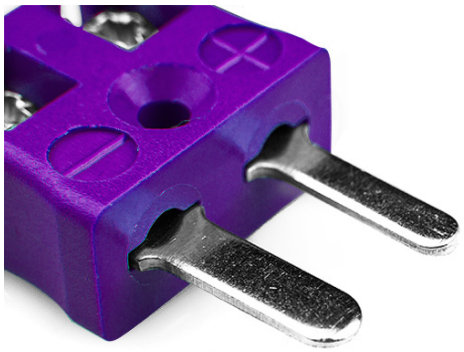

Labfacility are the UK's leading manufacturer of Temperature Sensors, Thermocouple Connectors and associated Temperature Instrumentation and stockings of Thermocouple Cables. The Company has been trading since 1971 and is ISO9001 accredited.

Connettore Termocoppia Miniatura Spina a Filo Rapido AM-E-MQ Tipo E ANSI

Connettore in miniatura con pin piatti per la spina. Connessione facile con il jab-in per una rapida terminazione. Basta spingere il filo e stringere la vite.

Specifiche

Specifications

Product Code	XE-9041-001
General Description	Easy jab-in connection for rapid termination.
Thermocouple Type	E ANSI
Connector Type	Quick Wire Plug
Connector Size	Miniature
Colour	Violet
Max. Temperature	220°C
Pins	Flat Pins
+Positive Contact	Nickel Chromium
-Negative Contact	Copper Nickel
Standards Met	BS EN 50212:1997. RoHS